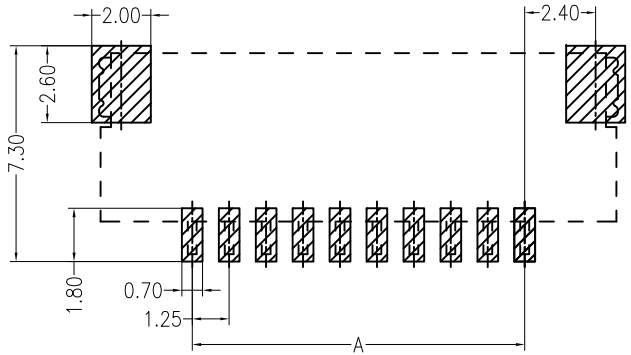

PCB LAYOUT(Tolerance:±0.05)

JKUN 'ㄓ接插件有限ㄙ WENZHOU JKUN CONNECTOR CO.,LTD.			TITLE:
GENERAL TOLERANCE		USE:	PART NO.:
X. ±0.50	X. ±5°	APPD:	
X.X ±0.30	X.X ±2°		DWG NO.:
X.XX ±0.20	X.XX ±1°	CHKD:	
	UNITS: mm	DR: FangSongLe	SCALE / SHEET