REV	DESCRIPTION	DESIGN	DATE

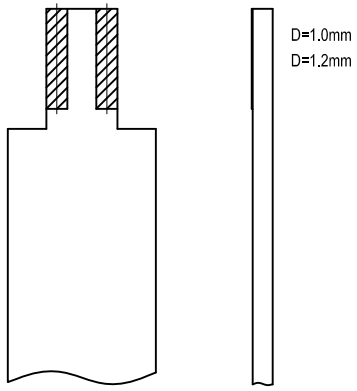

ITEM	COMPONENT		Q'TY	MATERIAL	FINISH
C					
B	CONTACT		2 PCS	PhosphorBronze	MATTE Sn-plated
A	PEDESTAL		1 PCS	LCP	UL 94V-0, COLOR:BEIGE

			TITLE:	
X.±0.5		USE:	PART NO.:	
.		APPD:		
			DWG NO.:	
--	--	CHKD:		
	UNITS: mm	DR:	SCALE	SHEET